Issued April 2010 12512

DATA SHEET

KABELINDO NYFGBY CABLE

Based on Kabelindo Datasheet

PT. KABELINDO MURNI Tbk

NYFGbY 0.6/1 kV

Copper Conductor, PVC Insulated, SWA, PVC Sheated

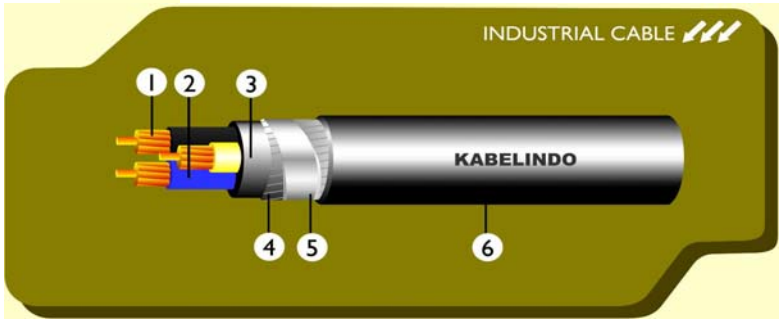


```
1. Conductor     : Annealed Copper wire
2. Insulation    : Extruded PVC
3. Filler        : Extruded PVC
4/5. Armour      : Galvanized Flat Steel and tape
6. Sheath        : Extruded PVC
```

PVC LOW VOLTAGE CABLE

TECHNICAL DATA

Spec — Specification : SPLN 43 -2 : 1994,
IEC 60502 - 1 : 1997

APL — Multicores power and control cable used for indoor and outdoor installation direct burial

Cu — Conductor Shape : re = Circula
rm = Circul

DCV — DC Test Voltage : 8,5 kV for 5

DIMENSIONAL DATA

2 CORES

SIZE	No.of wire and Shaped Of Conductor		Nominal Thickness		Approximately		Min. Bending Diameter	Std. Length per reel
			Insulation	Outer Sheath	Overall Diameter	Net. Weight		
mm²	pcs	shape	mm	mm	mm	kg/km	mm	m
1.5	1	re	0.8	1.8	16	482	288	1000
	7	rm			16.1	486	290	
2.5	1	re			16.2	505	292	
	7	rm			16.3	508	293	
4	1	re	1		15.9	514	286	
	7	rm			16.5	538	297	
6	1	re			16.9	567	304	
	7	rm			17.7	623	319	
10	7	rm			19.4	782	349	
16	7	rm			21.5	1015	387	
25	7	rm	1.2		24.9	1383	448	
35	7	rm			27.1	1709	488	
50	19	rm	1.4	1.9	30.5	2170	549	
70	19	rm		2	34.5	2846	621	
95	19	rm	1.6	2.1	39.2	3702	706	
120	37	rm		2.2	42.5	4423	765	500
150	37	rm	1.8	2.3	46.9	5347	844	
185	37	rm	2	2.5	51.8	6501	932	
240	61	rm	2.2	2.7	58	8231	1044	300
300	61	rm	2.4	2.8	64.1	10081	1154	

ELECTRICAL DATA

SIZE	DC Resistance at 20ºC		Current Carrying Capacity at 30ºC		Conductor Short Circuit Current Capacity at :			DC Voltage Test
	Conductor (Max)	Insulation (Min)	In Ground	In Air	0.1 second	0.5 second	1.0 second	
mm²	Ohm/km	M.ohm.km	A	A	kA	kA	kA	
1.5	12.1	50	27	21	0.67	0.30	0.21	8.5 kV for 5 minutes
2.5	7.41		36	29	1.12	0.50	0.36	
4	4.61		47	34	1.80	0.80	0.57	
6	3.08		59	48	2.69	1.20	0.85	
10	1.83		78	66	4.49	2.01	1.42	
16	1.15	40	102	90	7.18	3.21	2.27	
25	0.727		134	120	11.23	5.02	3.55	
35	0.524		160	150	15.72	7.03	4.97	
50	0.387	30	187	180	22.45	10.04	7.10	
70	0.268		230	230	31.43	14.06	9.94	
95	0.193		280	275	42.66	19.08	13.49	
120	0.153		320	320	53.89	24.10	17.04	
150	0.124	20	355	379	67.36	30.12	21.30	
185	0.0991		409	430	83.07	37.15	26.27	
240	0.0754		472	510	107.77	48.20	34.08	
300	0.0601		525	590	134.71	60.25	42.60	

NYFGbY 0.6/1 kV

Copper Conductor, PVC Insulated, SWA, PVC Sheated

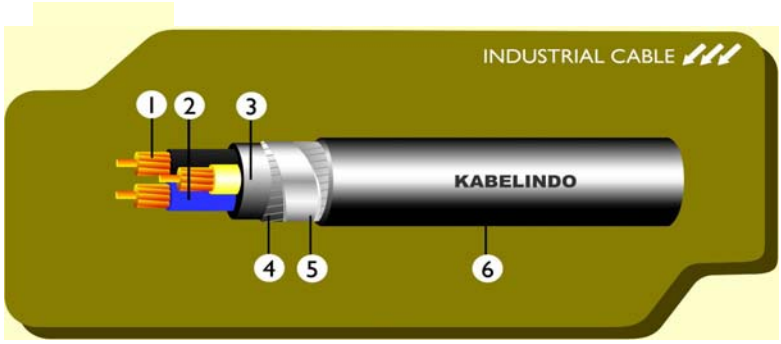

1. Conductor : Annealed Copper wire
2. Insulation : Extruded PVC
3. Filler : Extruded PVC
4/5. Armour : Galvanized Flat Steel and tape
6. Sheath : Extruded PVC

PVC LOW VOLTAGE CABLE

TECHNICAL DATA

Spec — Specification : SPLN 43 -2 : 1994, IEC 60502 - 1 : 1997

APL — Multicores power and control cable used for indoor and outdoor installation direct burial

Cu — Conductor Shape : re = Circu rm = Circ

DCV — DC Test Voltage : 8,5 kV for

DIMENSIONAL DATA

3 CORES

SIZE	No.of wire and Shaped Of Conductor		Nominal Thickness		Approximately		Min. Bending Diameter	Std. Length per reel
			Insulation	Outer Sheath	Overall Diameter	Net. Weight		
mm²	pcs	shape	mm	mm	mm	kg/km	mm	m
1.5	1	re	0.8	1.8	16.2	502	292	1000
	7	rm			16.2	500	292	
2.5	1	re			16.7	543	301	
	7	rm			16.4	532	295	
4	1	re	1		16.6	552	299	
	7	rm			17.2	578	310	
6	1	re			17.7	665	319	
	7	rm			18.5	700	333	
10	7	rm			20.4	923	367	
16	7	rm			22.6	1010	407	
25	7	rm	1.2		26.2	1695	472	
35	7	rm			28.6	2084	515	
50	19	sm	1.4	1.9	28.1	2403	506	
70	19	sm		2	31.3	3112	563	
95	19	sm	1.6	2.2	35.6	4151	641	
120	37	sm		2.3	38.4	5041	691	500
150	37	sm	1.8	2.4	42.2	6121	760	
185	37	sm	2	2.6	46.8	7377	842	
240	37	sm	2.2	2.8	52.3	9536	941	300
300	37	sm	2.4	3	57.4	11717	1033	

ELECTRICAL DATA

SIZE	DC Resistance at 20ºC		Current Carrying Capacity at 30ºC		Conductor Short Circuit Current Capacity at :			DC Voltage Test
	Conductor (Max)	Insulation (Min)	In Ground	In Air	0.1 second	0.5 second	1.0 second	
mm^2	Ohm/km	M.ohm.km	A	A	kA	kA	kA	
1.5	12.1	50	24	18	0.67	0.30	0.21	8.5 kV for 5 minutes
2.5	7.41		32	25	1.12	0.50	0.36	
4	4.61		41	34	1.80	0.80	0.57	
6	3.08		52	44	2.69	1.20	0.85	
10	1.83		69	60	4.49	2.01	1.42	
16	1.15	40	89	80	7.18	3.21	2.27	
25	0.727		116	105	11.23	5.02	3.55	
35	0.524		138	130	15.72	7.03	4.97	
50	0.387	30	165	160	22.45	10.04	7.10	
70	0.268		205	200	31.43	14.06	9.94	
95	0.193		245	245	42.66	19.08	13.49	
120	0.153		285	285	53.89	24.10	17.04	
150	0.124	20	315	325	67.36	30.12	21.30	
185	0.0991		355	370	83.07	37.15	26.27	
240	0.0754		415	435	107.77	48.20	34.08	
300	0.0601		535	600	134.71	60.25	42.60	

NYFGbY 0.6/1 kV

Copper Conductor, PVC Insulated, SWA, PVC Sheated

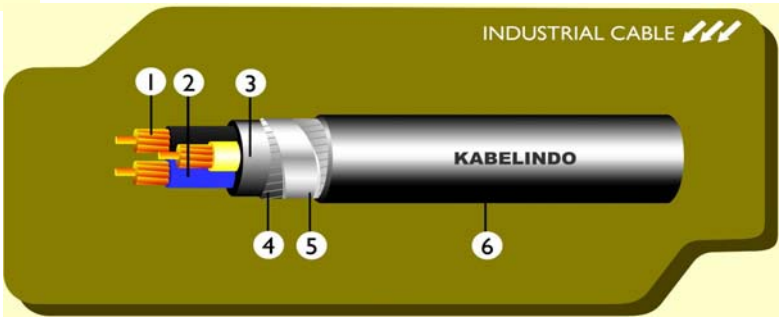


```
1. Conductor     : Annealed Copper wire
2. Insulation    : Extruded PVC
3. Filler        : Extruded PVC
4/5.  Armour     : Galvanized Flat Steel and tape
6. Sheath        : Extruded PVC
```

PVC LOW VOLTAGE CABLE

TECHNICAL DATA

Spec — Specification : SPLN 43 -2 : 1994,
IEC 60502 - 1 : 1997

APL — Multicores power and control cable used for indoor and outdoor installation direct burial

Cu — Conductor Shape : re = Circu
rm = Circ

DCV — DC Test Voltage : 8,5 kV for

DIMENSIONAL DATA

4 CORES

SIZE	No.of wire and Shaped Of Conductor		Nominal Thickness		Approximately		Min. Bending Diameter	Std. Length per reel
			Insulation	Outer Sheath	Overall Diameter	Net. Weight		
mm²	pcs	shape	mm	mm	mm	kg/km	mm	m
1.5	1	re	0.8	1.8	12	494	216	1000
	7	rm			12.4	510	223	
2.5	1	re			13	520	234	
	7	rm			13.6	529	245	
4	1	re	1		15.1	662	272	
	7	rm			15.8	710	284	
6	1	re			16.3	797	293	
	7	rm			17.2	855	310	
10	7	rm			19.4	1101	349	
16	7	rm			21.8	1455	392	
25	7	rm	1.2		25.9	2093	466	
35	7	rm		1.9	28.6	2602	515	
50	19	sm	1.4	2	30	3080	540	
70	19	sm		2.1	34.1	4093	614	
95	19	sm	1.6	2.3	38.7	5370	697	
120	37	sm		2.4	42.6	6563	767	500
150	37	sm	1.8	2.6	46.3	7938	833	
185	37	sm	2	2.8	52.2	9756	940	
240	37	sm	2.2	3	58.5	12409	1053	300
300	37	sm	2.4	3.2	65.4	15104	1177	

ELECTRICAL DATA

SIZE	DC Resistance at 20ºC		Current Carrying Capacity at 30ºC		Conductor Short Circuit Current Capacity at :			DC Voltage Test
	Conductor (Max)	Insulation (Min)	In Ground	In Air	0.1 second	0.5 second	1.0 second	
mm^2	Ohm/km	M.ohm.km	A	A	kA	kA	kA	
1.5	12.1	50	24	18	0.67	0.30	0.21	8.5 kV for 5 minutes
2.5	7.41		32	25	1.12	0.50	0.36	
4	4.61		41	34	1.80	0.80	0.57	
6	3.08		52	44	2.69	1.20	0.85	
10	1.83		69	60	4.49	2.01	1.42	
16	1.15	40	89	80	7.18	3.21	2.27	
25	0.727		116	105	11.23	5.02	3.55	
35	0.524		138	130	15.72	7.03	4.97	
50	0.387	30	165	160	22.45	10.04	7.10	
70	0.268		205	200	31.43	14.06	9.94	
95	0.193		245	245	42.66	19.08	13.49	
120	0.153		280	285	53.99	24.10	17.04	
150	0.124	20	315	325	67.36	30.12	21.30	
185	0.0991		355	370	83.07	37.15	26.27	
240	0.0754		415	435	100.77	48.20	34.08	
300	0.0601		465	500	134.71	60.25	42.60	

PT. KABELINDO MURNI Tbk

NYFGbY 0.6/1 kV

Copper Conductor, PVC Insulated,SWA, PVC Sheated

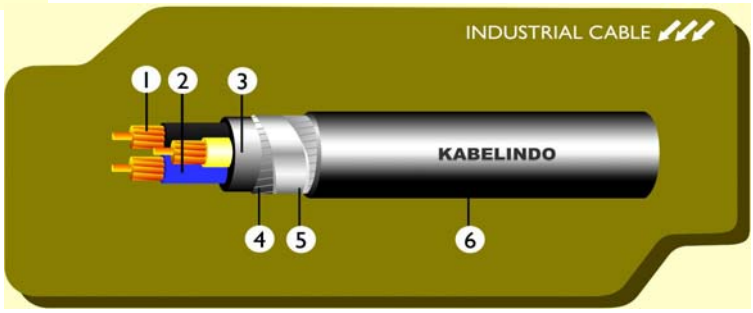


```
1. Conductor     : Annealed Copper wire
2. Insulation    : Extrude
3. Filler        : Extruded PVC
4/5.  Armour     : Galvani
6. Sheath        : Extruded PVC
```

PVC LOW VOLTAGE CABLE

TECHNICAL DATA

Spec — Specification : SPLN 43 -2 : 1994,
IEC 60502 - 1 : 1997

APL — Multicores power and control cable used for indoor and outdoor installation direct burial

Cu — Conductor Shape : re = Circular So
rm = Circular St

DCV — DC Test Voltage : 8,5 kV for 5 minu

DIMENSIONAL DATA

5 CORES

SIZE	No.of wire and Shaped Of Conductor		Nominal Thickness		Approximately		Min. Bending Diameter	Std. Length per reel
			Insulation	Outer Sheath	Overall Diameter	Net. Weight		
mm²	pcs	shape	mm	mm	mm	kg/km	mm	m
1.5	1	re	0.8	1.8	16.6	503	589	1000
	7	rm			16.3	521	570	
2.5	1	re			17	573	623	
	7	rm			17.6	619	678	
4	1	re	1		19.3	777	837	
	7	rm			20.1	831	881	
6	1	re			20.7	939	1009	
	7	rm			21.6	1005	1092	
10	7	rm			24	1323	1403	
16	7	rm			26.8	1750	1873	
25	7	rm	1.2	1.9	31.3	2519	2655	
35	7	rm		2	34.7	3158	3344	
50	19	rm	1.4	2.1	39.7	4117	4291	500

ELECTRICAL DATA

SIZE	DC Resistance at 20ºC		Current Carrying Capacity at 30ºC		Conductor Short Circuit Current Capacity at :			DC Voltage Test
	Conductor (Max)	Insulation (Min)	In Ground	In Air	0.1 second	0.5 second	1.0 second	
mm^2	Ohm/km	M.ohm.km	A	A	kA	kA	kA	
1.5	12.1	50	24	18	0.67	0.30	0.21	8.5 kV for 5 minutes
2.5	7.41		32	25	1.12	0.50	0.36	
4	4.61		41	34	1.80	0.80	0.57	
6	3.08		52	44	2.69	1.20	0.85	
10	1.83		69	60	4.49	2.01	1.42	
16	1.15	40	89	80	7.18	3.21	2.27	
25	0.727		116	105	11.23	5.02	3.55	
35	0.524		138	130	15.72	7.03	4.97	
50	0.387	30	165	160	22.45	10.04	7.10	